VM-LCDWMB1

SKU: 224228

Universal Wall Mount for LCD Monitors, 32" to 65", VESA support up to 35 kg max.

Main Features

- High quality steel construction
- Anodised surface prevents rust
- Flexible tilting (max. 10°) for better viewing experience
- Lockable safety bar (padlock not included)
- VESA standard design
- Accommodate LCD displays from 26" up to 55" displays
- Support up to 35 kg max.

Specifications

Other	
Manufacturer order number	224228

© Copyright eneo by VIDEOR E. Hartig GmbH, April 2024 -Technical changes reserved

VM-LCDWMB1

Technical Drawing

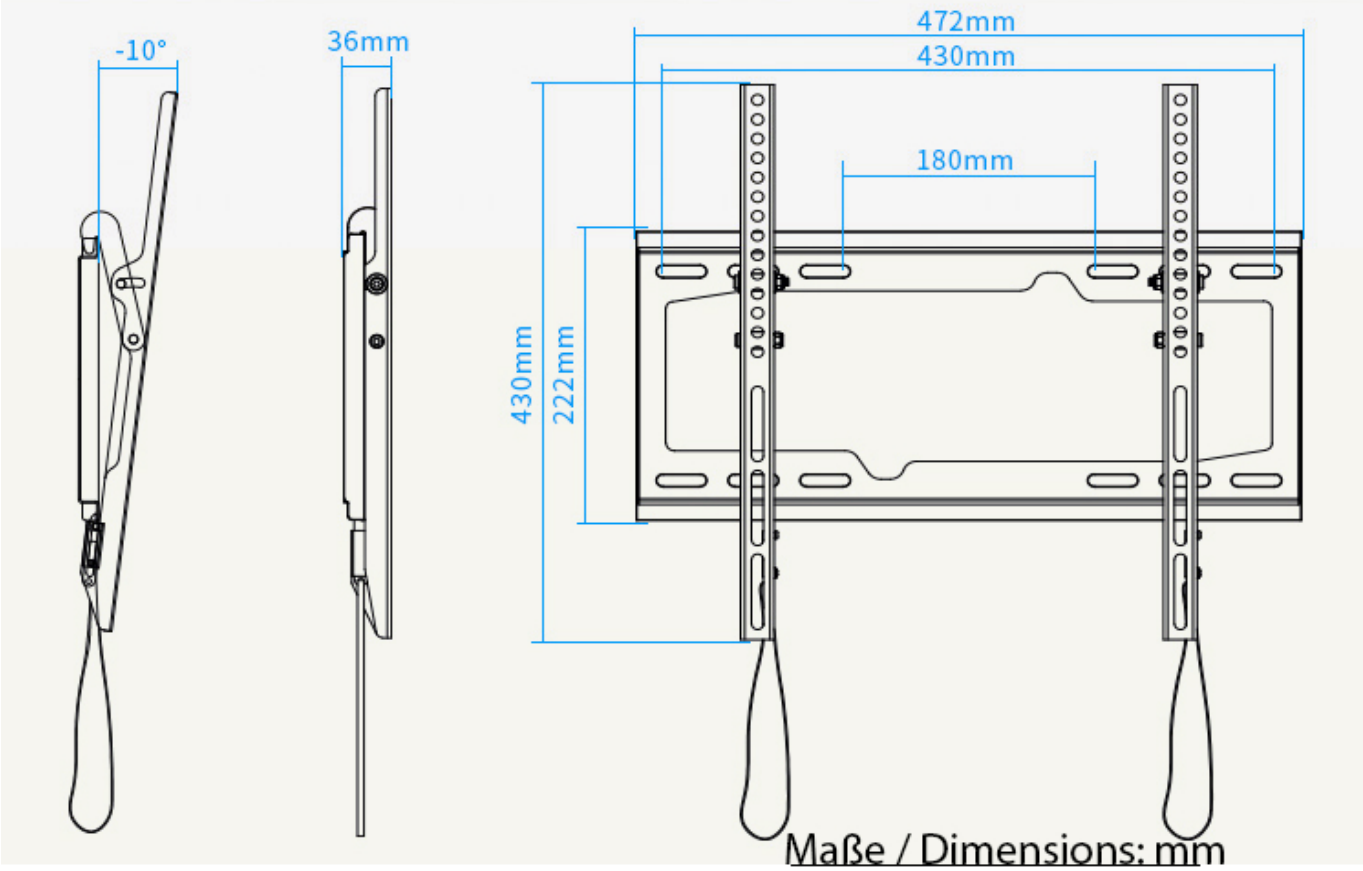

eneo is a registered trademark of
VIDEOR E. Hartig GmbH
Carl-Zeiss-Straße 8

63322 Rödermark, Deutschland

Phone: +49 6074 - 888 - 300
Fax: +49 6074 - 888 - 100
E-Mail: info@eneo-security.com
Web: www.eneo-security.com

Stay informed and subscribe to the eneo newsletter

© Copyright eneo by VIDEOR E. Hartig GmbH, April 2024 -Technical changes reserved